Be Safe.. Think

B-Safe

BK061015PRO

BK061215TRAD

ROOFERS KIT
USER MANUAL

WAHA GOLD MEMBER 2004

bsi. ISO 9001 Quality Management

KIT CONTENTS

This user manual is intended to meet the Manufacturer's Instructions as required by AS/NZS 1891.4 and should be used as part of a Fall Arrest Training Program.

WARNING These products are part of a personal fall prevention system; users must follow the manufacturer's instructions for each component of the system. These instructions must be provided to the user of the equipment. The user must read and understand these instructions before using the equipment. The equipment must be maintained in accordance with the instructions for each component. Alterations, misuse or failure to follow these instructions, may result in serious injury.

BK061215TRAD - Tradie Roofers Kit Contents

- BHO1120TRAD - All Purpose Fall Arrest Harness c/w Front and Rear Fall Arrest Attachment points and warning load indicator
- BSO10115A-TRAD - Rope Safety Line - 15 metres Kernmantle Rope with eye on one end and fitted with BSM0012 manual rope adjuster with built in energy absorber
- BP03101.5 - Attachment strap - 25mm web rated for 1 Person
- BSK0003-16 - Alloy Steel Twist Lock karabiner ANSI x 3
- TRADIE Back Pack
- **140kg Rated**

BK061015PRO - Professional Roofers Kit Contents

- BHO1120 - All Purpose Fall Arrest Harness c/w Front and Rear Fall Arrest Attachment points and warning load indicator
- BSO10115A - Rope Safety Line - 15 metres Kernmantle Rope fitted with double action self locking hook at one end and BSM0012 - manual rope adjuster
- BP03102 - 2m attachment strap - 25mm web rated for 1 Person
- BLO1112PRO-ADJ - 2m Heavy Duty adjustable webbing shock absorbing lanyard with Snap Hooks
- BSK0003-16 - Alloy Steel Twist Lock Karabiner
- BA00024 - Suspension Trauma Straps
- B-SAFE Back Pack
- **140kg Rated**

B-SAFE manufacture a range of Roofers Kits with various content options. Each kit has its own unique code number for the content variations. However, this manual still applies to all variations.

DESCRIPTION

B-SAFE Roofers Kit is to provide a fall restraint system for accessing large areas of roof in a safe manner. While still providing the necessary personal protection should unforeseen hazards be encountered.

Prior to any work being carried out on a roof or structure, a risk assessment should be conducted to identify the hazards that exist and the risks that they pose.

SIMPLE RISK ASSESSMENT PROCEDURE

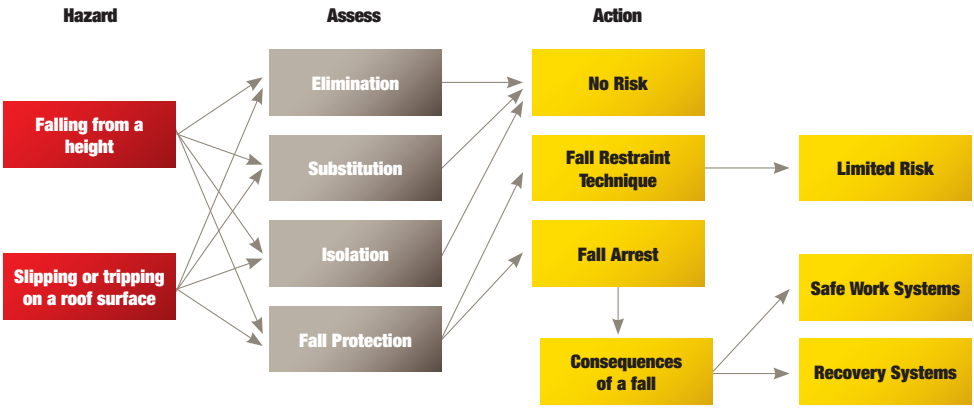

This table is a sample only as many other hazard factors can and will come into account. Other issues to be addressed at this stage include, but are not limited to personal training levels, competency, weather conditions, surface conditions, etc. Reference should be made AS/NZS 1891.4.

DEFINITIONS

Anchor Point: a secure point for attachment on a structure to which a fall arrest device, lanyard assembly or restraint line may be secured.

Attachment Hardware: any ring, hook, karabiner, or other connecting device located in such a position that it must sustain by itself the full loading of a fall arrest.

Energy Absorber: an attachment which by design reduces the deceleration force imposed by a sudden arrested fall, used in series with a fall arrest harness and lanyard.

Fall Arrest Harness: an assembly of interconnected shoulder and leg straps, with or without a waist belt, designed for attachment to a lanyard, pole strap, or fall arrest lanyard, and used where there is likelihood of free or restrained falls.

Free fall: any fall or part of a fall where the person suffering the fall is under the unrestrained influence of gravity over any fall distance either vertically or on a slope on which it is not possible to walk without the assistance of a hand rail or hand line.

Lanyard: a line used, usually as part of a lanyard assembly to connect a fall arrest harness to an anchorage point or static line in situations where there is risk of free fall.

Restrained fall: any fall where the person suffering the fall is under less than the full influence of gravity due to the action of a restraining device such as a pole strap, or restraint line or is sliding down a slope less steep than is required to have the assistance of a hand rail or hand line.

Restraint Line: a line used to restrict the horizontal movement of the user to prevent a fall. (To be used in restraint technique only, should include an energy absorber in the event of a fall)

Total Fall Distance: the total distance a person is likely to fall during both the free and restraint parts of a fall, including the maximum dynamic extension of all supporting equipment.

REFERENCE MATERIAL

Relevant Australian/New Zealand Standards listed below are recommended for further reading:

- **AS/NZS 1891.1 PERSONAL EQUIPMENT FOR WORK AT HEIGHT**
  Part 1 - Manufacturing Requirements For Full Body Combination And Lower Body Harnesses.
  This is a manufacturing standard which specifies requirements for materials, design, manufacturing and testing of harnesses. Testing utilises 100kg mass – users of greater mass should consult manufacturer.
- **AS/NZS 1891.2 PERSONAL EQUIPMENT FOR WORK AT HEIGHT**
  Part 2 - Horizontal Lifeline And Rail Systems.
- **AS 1891.3 PERSONAL EQUIPMENT FOR WORK AT HEIGHT**
  Part 3 - Manufacturing Requirements For Fall-Arrest Device.
- **AS/NZS 1891.4 INDUSTRIAL FALL-ARREST SYSTEMS AND DEVICES**
  Part 4 - Selection, Use And Maintenance.
- **AS 1891.5 PERSONAL EQUIPMENT FOR WORK AT HEIGHT -**
  Part 5 - Manufacturing Requirements For Lanyard Assemblies And Pole Straps.
- **LOCAL STATE CODES OF PRACTICE REGARDING WORKING AT HEIGHTS**

SYSTEM LIMITATIONS

a. The BK061215TRAD roofers' kit is designed for one person use (140kg including tools).
The BK061015PRO roofers' kit is designed for one person use (140kg including tools).
No more than one person can be attached to Anchor Points, life lines, rope grabs or lanyards.

b. Always attempt to set system up in a total fall restraint fashion, that is where there is no risk of any free fall component

c. In the event of a free fall risk being possible e.g. brittle or translucent roofing material. Ensure that there is sufficient fall clearance below the roof material. (See section on fall clearances)

d. The presence of hazardous substances to the equipment, e.g. painting materials, solvents, hot surfaces, chemicals, corrosives, moving machinery, sharp edges etc can cause damage to the system without the user being aware, and may cause the system to fail.

e. The presence of other hazards such as high voltage equipment, welding or heated equipment will cause damage to the system.

f. Component compatibility. The equipment is designed and tested for use with other B-Safe products, should any other equipment be used on the system, then please consult with the Beaver - B-Safe personnel for approval / compatibility prior to use.

g. Training. This equipment is intended for use by personnel who have been fully trained in its correct use and application.

h. The system can be used where pendulum effects may occur and it is extremely important to ensure that this factor is taken into consideration when systems are set up and employed. (See pendulum effect section)

ROOFERS KIT SYSTEM SET UP:

Prior to each use of the kit and its components, carefully inspect it according to the inspection requirements of "Section 9 and Appendices C & D (AS/NZS1891.4)"

Similarly Anchorages should be inspected in accordance with Section 3 Clause 3.1.2 and Table 3.1 - "Anchorages (AS/NZS 1891.4)".

In particular:

"The building or structure and anchorage points shall be assessed by an engineer, unless it is clear to a Height Safety Supervisor that the anchorage system is structurally adequate. An example of where an engineer may not be required is where an anchorage sling of the adequate strength is secured around a solid permanent structure such as a plant room. However, if any doubt exists as to the structural adequacy of the anchorage, an engineer shall make the assessment. If called upon to make the assessment the engineer shall certify in writing that all combinations of loads in a worst case situation can be safely contained by the proposed structure and anchorage points."

TABLE 3.1 - STRENGTH REQUIREMENTS FOR ANCHORAGES

Purpose of anchorage	Ultimate strength in direction of loading (minimum) (see note 1)
Single point anchorages	
Free Fall Arrest – one person	15kN
Free Fall Arrest – two persons attached to the same anchor	21kN
Limited Free Fall Arrest (including rope access anchorages)	12kN
Restraint Technique	12kN or 15kN (see note 2

NOTES:

1. As far as practicable all single point one-person anchorages should meet the 15kN requirement regardless of primary purpose.
2. Anchorage strengths applicable when using restraint technique are either 15kN or 12kN depending on whether fall risk is free fall or limited free fall.

ANCHORAGES

ROOF AND STRUCTURE PROVIDES ANCHORAGE LOCATION BY –

a. Lifting tile and wrapping rafter or top chord of roof truss adjacent to diagonal tie with anchor strap provided. (See right and note the anchor strap should wrap twice).

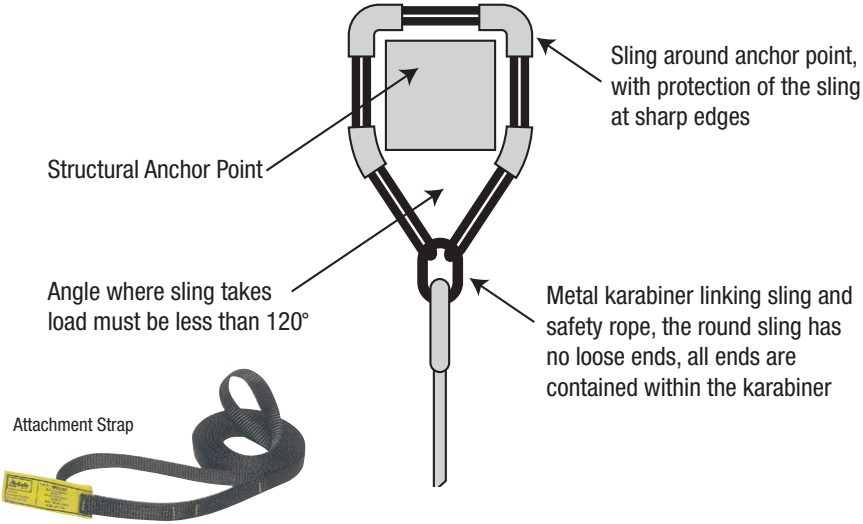

b. Temporary T Bar style roof anchors (available separately) can be used on metal roofs.

c. Alternate anchorages should be approved by local authority.

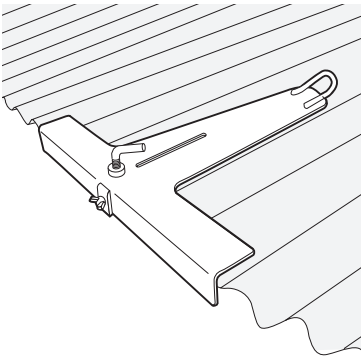

Sit the anchor on top of corrugation roofing iron as shown

PLAIN VIEW OF SYSTEM SET UP

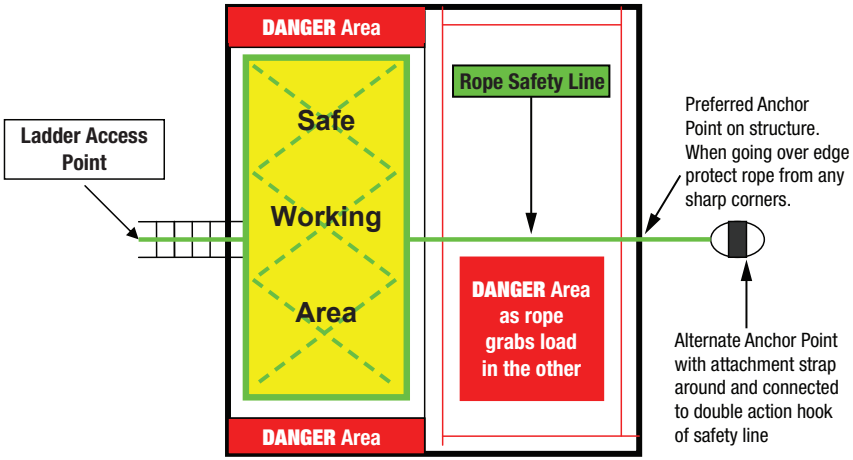

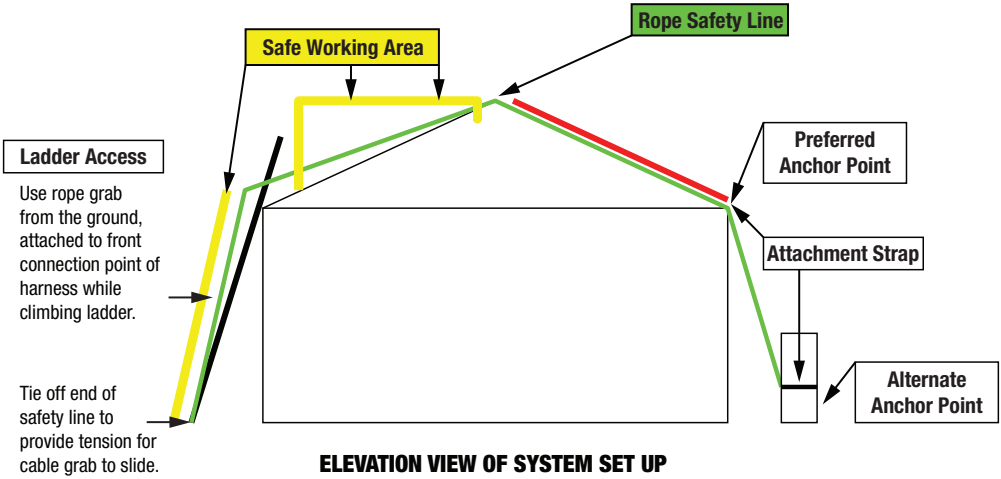

ELEVATION VIEW OF SYSTEM SET UP

Safety Line must be taut from Anchor Point at all times.

ACTUAL SYSTEM SET UP PICTURES

PROTECTION WHILE CLIMBING OR DESCENDING A LADDER

- A full body harness is used as a best practice with front connection points for the rope grab to be attached with a karabiner
- Lanyard to be connected to rear D prior to climbing to roof
- The rope has been placed over the roof and tied off at the base of the ladder. The ladder has also been secured to the gutter
- Rope grab connected to front loops of the full body harness
- Rope line of the Roofers Kit secured to the base of the ladder

TRANSITION FROM LADDER TO ROOF

When you are transitioning from the ladder to the roof:

1. Connect the lanyard that is attached to the rear D on harness to the rope grab, ensuring a secure connection
2. Then remove the front loop connection from the rope grab
3. The rope grab should be located far enough back from the edge to prevent a fall

SYSTEM USE WHILE ON ROOF

- Roofers Kits are used with either a 2m adjustable shock absorbing lanyard or shock absorber alone
- The best practice is to set the rope grab the distance of the lanyard back from the edge of the roof
- Make sure that the rope line is taut from the Anchor Point

FALL CLEARANCES

REFER TO AS/NZS 1891.4, SECTION 7

Ensure that the fully extended lanyard length does not allow the user to reach the edge. Sufficient fall clearance, taking into account the extension of the shock absorbing component of the lanyard has to be included.

SHOCK ABSORBING LANYARD

- FC = FF + AB + 1000
- FC = Foot Clearance
- FF = Free Fall (Max. allowed 2000mm)
- Add 250mm for Harness slippage
- AB = Energy Absorber Extension

AS/NZS1891.4 advises that this can be estimated using FF which reduces FC accordingly.

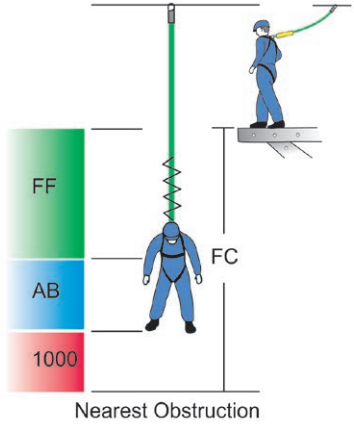

FF	AB
600 mm	300 mm
1000 mm	500 mm
1500 mm	600 mm
2000 mm	900 mm

1000mm Standard Safety Clearance

PRECAUTION AREAS PENDULUM EFFECT OR FALLING THROUGH THE ROOF MATERIAL

Adjustable Lanyard shown

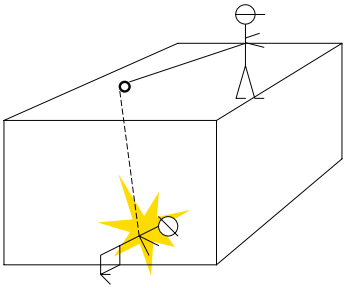

Precaution must be taken to avoid any possibility of a fall occurring and then the person swinging into the structure or the ground.

MAINTENANCE REQUIREMENTS

The equipment must be checked before and after every use. Special attention should be paid to the rope, carefully checking the complete length for any possible damage. The rope-grab needs to be inspected for any damage also.

All hooks and catches must be operating correctly with self closing and a second action to secure.

BASIC HARNESS INSPECTION CRITERIA - USER – BEFORE USE INSPECTION

The user needs to check the following points

- Date of manufacture: The harness cannot be older than 10 years from the date of manufacture. The reason for this life limitation on a harness is because of possible UV degradation of the webbing.
- Inspect webbing for:

  Abrasion – scuff marks on webbing
  Cuts – score marks or cuts in web
  Heat- burn marks or shiny surfaces on web
  Chemicals – grease, paint, acidic contact on web
  Excessive stretching - Stitching loose

If any of the above faults are present then harness should be referred to a height safety inspector for further inspection.

- Check all buckles, adjusters and connection "D rings" for cuts, nicks, corrosion, heat damage, bending, warping or twisting.
- Examine all stitched areas to ensure that no stitching has been cut, broken, heat or chemically damaged or stretched.
- If harness has extension strap on rear "D" ring, check fall indicator to see if harness has been shock loaded.
- Check harness manufacture compliance with AS/NZS1891.1

If any conditions mentioned above are present, check with competent person or refer your equipment to the supplier for inspection.

BH01120

BH01120TRAD
(no mesh at rear of harness)

Suspension Trauma Straps
(BK061015PRO Only)

SHOCK ABSORBING LANYARD INSPECTION CRITERIA - USER – BEFORE USE INSPECTION

The user needs to check the following points

- Date of manufacture: The lanyard cannot be older than 10 years from the date of manufacture. The reason for this life limitation on a lanyard is because of possible UV degradation of the webbing.
- Inspect webbing for:

  Abrasion – scuff marks on webbing
  Cuts – score marks or cuts in web
  Heat- burn marks or shiny surfaces on web
  Chemicals – grease, paint, acidic contact on web
  Excessive stretching - Stitching loose

If any of the above faults are present then harness should be referred to a height safety inspector for further inspection.

- Examine all stitching areas to ensure that no stitching has been cut, broken, heat or chemical damage or stretching
- Check all hooks, karabiners and/or attachment devices for:
  - Double action closing and locking
  - Ensure gate/catch locks close and cannot be opened by one action
  - Check metal components for corrosion, heat damage, bending, warping and twisting
- Inspect the lanyard energy absorber for any signs of deployment (Tear web exposed or shrink wrap broken)
- Check lanyard manufacture compliance with AS/NZS1891.5

If any conditions mentioned above are present, check with height safety inspector for further inspection.

BL01112PRO-ADJ - Adjustable Lanyard
(BK061015PRO Only)

Manufacturer's label with:
- Serial Number
- Model Number
- Date of Manufacture
- Withdrawal from Service Date

Check all stitching

Inspect all webbing

Check hooks

BS010115A-TRAD - Lanyard Safety Line
(BK061215TRAD Only)

GENERAL MAINTENANCE OF FALL PROTECTION EQUIPMENT

- Any equipment that has been used to arrest a fall should be immediately removed from service and destroyed. Any product involved in a fall arrest load cannot be re-certified due to the high possible loadings that have occurred.
- Only use mild natural soap and warm water to clean lanyards, harness or ropes.
  DO NOT dry clean or wash in hot water or use harsh cleaning agents.
- All Products should be naturally air dried.
  DO NOT dry in tumble dryers, use heat guns or compressed air to dry any fall protection equipment.

REGULAR MAINTENANCE IS REQUIRED AS PER THE FOLLOWING TABLE:

Equipment	**User**	**Height Safety Inspector,** Manufacturers Recommendation	**Service life*** Manufacturer Requirements
Personal equip, harness, lanyards, hardware	Before & After Use	6 monthly	10 years
Fall arrest device type 1	Before & After Use	6 monthly	10 years
Fall arrest device type 2 & 3	Before & After Use	12 monthly - internal 6 monthly external*	Subject to Servicing
Ropes, Attachment Straps and Tie Off Adaptors	Before & After Use	6 monthly	5 years

- A competent person as defined in AS/NZS 1891.4 must perform the 6 monthly and annual inspections. The definition of a Height Safety Inspector as per AS/NZS 1891.4 is:
  "A person who has the Height Safety Theory competency and training, education and experience, acquired knowledge and skill enabling that person to correctly perform a specific task."
- **If there are any doubts - DO NOT USE.**
- **Contact your Supplier or the Manufacturer.**

HOW TO FIT A BODY HARNESS

Before using the B-Safe harness, you should inspect the harness straps, metal fittings connection points, and labels for damage. Refer to instruction booklet and if in any doubt you should contact your supervisor, supplier or B-Safe for advice. For reference to fall clearance, correct selection, usage and maintenance refer to AS/NZS 1891.4 (selection, use and maintenance).

STEP 1

Hold the harness by the rear dorsal connection D ring and gently shake the harness to untangle the straps. Ensure the leg straps are free and not buckled up. Ensure all straps are fully extended. Whilst holding the harness by the dorsal D, carry out a pre-use inspection of the components, webbing, stitching and buckles. Check labeling to identify the withdrawal from service date has not passed.

STEP 2

Hold the harness with the dorsal D facing away from you, place the shoulder straps of the harness over your hands (as shown) and hold the harness open.

STEP 3

Rotate harness and insert elbow into arm loop and then place arm through the loop, release shoulder strap and place other arm through the other shoulder loop and let harness fall onto the shoulders. Ensure the harness is fitted correctly without any webbing twists over the shoulders.

STEP 4

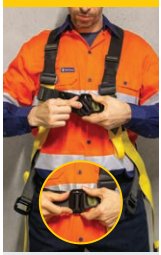

Buckle all straps prior to adjusting the fit. Locate chest strap and pass the smaller buckle plate through the other chest strap buckle (As shown in the "How to assemble buckles" diagrams). Hold buckle and pull webbing to tighten straps to a firm and comfortable fit and slide keepers along the leg strap webbing to hold free webbing.

STEP 5

Locate the leg straps and ensure the left leg strap is connected to the left hip buckle and the right leg strap is connected to the right hip buckle. Ensure the straps are not twisted and the loose webbing end is always on the outside, away from the body. Hold buckle and pull webbing to tighten straps to a firm and comfortable fit and slide keepers along the leg strap webbing to hold free webbing.

STEP 6

Adjust shoulder straps first to ensure that the rear dorsal D is located between the shoulder blades in the centre of the back. Then adjust chest and leg straps to a firm fit, and slide webbing keepers along to hold free webbing in place. When using the front attachment points, both loops must be connected as per AS/NZS 1891.1.

ATTACHING LANYARD TO REAR EXTENSION (Figure 1)

Rear Fall Arrest Extension Strap when fitted allows the person using the harness to see the hook being connected ensuring a correct attachment. To attach, release the strap from its resting place, hold the strap in one hand either over or under the shoulder where you can see the eye of the extension strap. Holding the hook in the other hand open the latch and place the hook onto the strap eye. Release the latch and pull the hook to ensure a correct connection has been made.

(Figure 1)

BUCKLE UP WAIST BELT (Figure 2)

If waist belt is fitted to the harness this should be buckled up after the chest straps have been fitted. Place hands on the side dees, then slide hands along the waist strap in a forward direction to ensure the strap is not twisted then buckle up as shown in the How to assemble buckles instructions. The waist belt should be tightened such that in the event of a fall it can slide up over the abdomen.

(Figure 2)

Please Note - Hooks should always be checked before use to ensure the latch is working correctly, (see instruction sheets) in the interest of safety, only trained staff should use this equipment.

HOW TO ASSEMBLE BUCKLES

- Make sure straps are not twisted. The loose end of the strap should be on the outside, away from the body, and should be used to adjust the fit.

- The small buckle with the centre bar must go through the slotted square link from back to front.
- Align the small buckle at right angles to the slotted square link from behind.

- The small buckle should fall neatly into place on top of the slotted square link.

- Tighten the harness by pulling the loose end of the strap.
- Adjust the keepers to hold the loose end in place.
- Follow the steps in reverse to unbuckle.
- Push the small buckle through the slotted square link completely from underneath.

These are general notes to assist personnel in the correct method of fitting harnesses. Please note in the interest of safety only trained personnel should use the equipment and any person using and fitting harnesses should read the instructions sheet and understand the instruction within. Product Training of personnel is available from B-Safe, for further information please contact your local representative or our customer service department.

ROOF ACCESS PROCEDURE - USING A LADDER

Ladder Bracket Procedure

This product is designed to hold a temporary ladder for entry and exit points onto roofs. The ladder bracket is not designed for permanent ladder attachment or as a fall arrest attachment point.

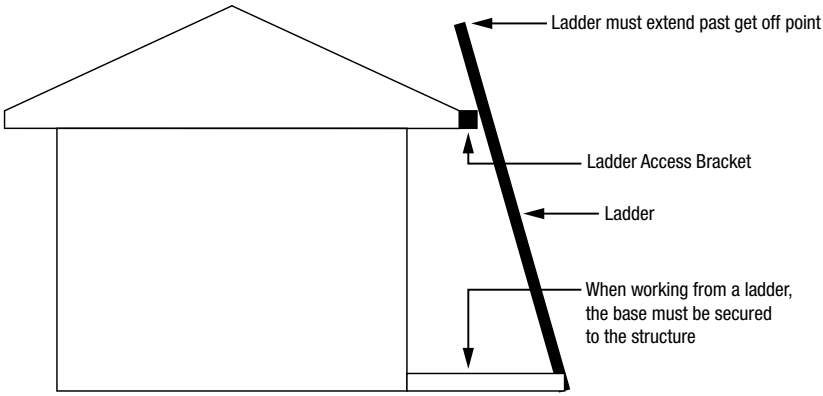

Steps for Entry and Exit of a Roof

1. Position top of ladder against ladder bracket making sure ladder is positioned between side restraints of the ladder access bracket. The top of the ladder must extend 1metre past the get off point.

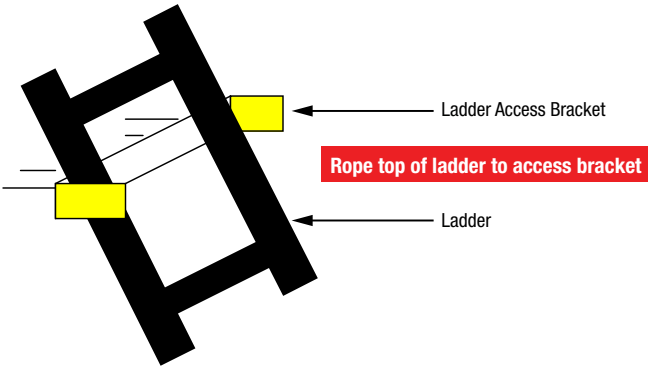

Steps for Entry and Exit of a Roof (cont.)

2. Ensure base of ladder is on stable, level ground at a ratio of 1m wide to 4m high.

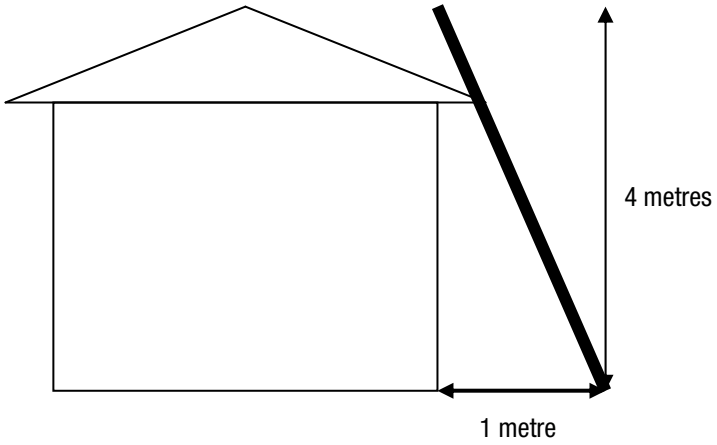

3. If possible secure base of ladder.

4. Fit safety harness before ascending the ladder; do not attach yourself to the ladder unless the ladder has been secured top and bottom.
   Note: Only when the ladder has been properly secured can a worker safely attach to the ladder with a restraint line no longer than 600mm and it should be attached to the front loops of the harness restraint point.

5. A temporary ladder can only be used as a work platform if all the above conditions are met.

6. Before stepping from the ladder onto the roof structure, ensure you have securely connected your restraint line or shock absorbing lanyard to the first roof anchor point.

7. When leaving the roof structure ensure both feet are securely on the ladder before disconnecting from the roof anchor point.

When working at heights with foot clearance less than 4.15 metres fall clearances are very important as a 2m shock absorbing lanyard requires foot clearance of 4.15metres (refer to diagram on fall clearances). If your fall clearance is less than this then shorter lanyards are required.

B-Safe Roofers Kit
Manufactured for Bunzl Brands & Operations Pty Ltd
55 Sarah Andrews Close, Erskine Park, NSW 2759
National Sales:1300 783 606
beaverbrands.com.au

ROOFERS KIT INSPECTION CERTIFICATE

(IN ACCORDANCE WITH AS/NZS 1891.5 & AS/NZS 1891.4)

Product:		**Date of Manufacture:**	
Withdraw from Service		**Report No:**	**Serial No:**

Component	**Condition of fault to be checked**	**Checked**	
Webbing	Cuts or Tears		
	Abrasion damage especially where there is contact w/ hardware		
	Excessive stretching		
	Damage due to contact with heat, corrosive or solvents		
	Deterioration due to rotting, mildew or ultraviolet exposure		
Snap Hooks & Karabiners	Distortion of Hook or Latch		
	Cracks or forging folds		
	Wear at swivels and latch pivot pin		
	Free movement of latch over its full travel		
	Broken, weak or misplaced latch springs		
	Free from dirt or other obstructions		
D Rings	Excessive vertical movement of the straight portion of the D Ring at its attachment point on the belt, so that the corners between the straight and curved sections of the D become completely exposed		
	Cracks, especially at the intersection of the straight and curved portions		
	Distortion or other physical damage of the D ring		
	Excessive loss of cross-section due to wear		
Buckles & Adjusters	Distortion or other physical damage		
	Cracks and forging laps where applicable		
	Belt Tongues		
	Open Rollers		
Sewing	Broken, cut or worn threads		
	Damage or weakening of the threads due to contact with heat, corrosives, solvents or mildew		
Ropes	Cuts, abrasion or fraying		
	Stretching		
	Damage due to contact with heat, corrosives, solvents, etc		
	Deterioration due to ultra violet light or mildew		
General Comments			

Final Appraisal:	**PASS:**		**FAIL:**	
INSPECTOR		**INSPECTOR**	**DATE:**	**DATE:**

CLEANING OF HARNESS: If soiled by dirt or grit, sponge down or hand wash with luke warm tap water using pure soap or soap flakes. Thoroughly rinse and hang harness to dry at room temperature out of direct sunlight and not exposed to direct heat. If any other condition exists consult inspection guide in operational instructions or contact your nearest Beaver Branch.

ROOFERS KIT INSPECTION CERTIFICATE

Product:		**Date of Manufacture:**	
Withdraw from Service		**Report No:**	**Serial No:**

Component	**Condition of fault to be checked**	**Checked**	
Webbing	Cuts or Tears		
	Abrasion damage especially where there is contact w/ hardware		
	Excessive stretching		
	Damage due to contact with heat, corrosive or solvents		
	Deterioration due to rotting, mildew or ultraviolet exposure		
Snap Hooks & Karabiners	Distortion of Hook or Latch		
	Cracks or forging folds		
	Wear at swivels and latch pivot pin		
	Free movement of latch over its full travel		
	Broken, weak or misplaced latch springs		
	Free from dirt or other obstructions		
D Rings	Excessive vertical movement of the straight portion of the D Ring at its attachment point on the belt, so that the corners between the straight and curved sections of the D become completely exposed		
	Cracks, especially at the intersection of the straight and curved portions		
	Distortion or other physical damage of the D ring		
	Excessive loss of cross-section due to wear		
Buckles & Adjusters	Distortion or other physical damage		
	Cracks and forging laps where applicable		
	Belt Tongues		
	Open Rollers		
Sewing	Broken, cut or worn threads		
	Damage or weakening of the threads due to contact with heat, corrosives, solvents or mildew		
Ropes	Cuts, abrasion or fraying		
	Stretching		
	Damage due to contact with heat, corrosives, solvents, etc		
	Deterioration due to ultra violet light or mildew		
General Comments			

Final Appraisal:	**PASS:**		**FAIL:**	
INSPECTOR		**INSPECTOR**	**DATE:**	**DATE:**

CLEANING OF HARNESS: If soiled by dirt or grit, sponge down or hand wash with luke warm tap water using pure soap or soap flakes. Thoroughly rinse and hang harness to dry at room temperature out of direct sunlight and not exposed to direct heat. If any other condition exists consult inspection guide in operational instructions or contact your nearest Beaver Branch.

ROOFERS KIT INSPECTION CERTIFICATE

(IN ACCORDANCE WITH AS/NZS 1891.5 & AS/NZS 1891.4)

Product:	**Date of Manufacture:**	
Withdraw from Service	**Report No:**	**Serial No:**

Component	**Condition of fault to be checked**	**Checked**	
Webbing	Cuts or Tears		
	Abrasion damage especially where there is contact w/ hardware		
	Excessive stretching		
	Damage due to contact with heat, corrosive or solvents		
	Deterioration due to rotting, mildew or ultraviolet exposure		
Snap Hooks & Karabiners	Distortion of Hook or Latch		
	Cracks or forging folds		
	Wear at swivels and latch pivot pin		
	Free movement of latch over its full travel		
	Broken, weak or misplaced latch springs		
	Free from dirt or other obstructions		
D Rings	Excessive vertical movement of the straight portion of the D Ring at its attachment point on the belt, so that the corners between the straight and curved sections of the D become completely exposed		
	Cracks, especially at the intersection of the straight and curved portions		
	Distortion or other physical damage of the D ring		
	Excessive loss of cross-section due to wear		
Buckles & Adjusters	Distortion or other physical damage		
	Cracks and forging laps where applicable		
	Belt Tongues		
	Open Rollers		
Sewing	Broken, cut or worn threads		
	Damage or weakening of the threads due to contact with heat, corrosives, solvents or mildew		
Ropes	Cuts, abrasion or fraying		
	Stretching		
	Damage due to contact with heat, corrosives, solvents, etc		
	Deterioration due to ultra violet light or mildew		
General Comments			

Final Appraisal:	**PASS:**		**FAIL:**	
INSPECTOR		**INSPECTOR**	**DATE:**	**DATE:**

CLEANING OF HARNESS: If soiled by dirt or grit, sponge down or hand wash with luke warm tap water using pure soap or soap flakes. Thoroughly rinse and hang harness to dry at room temperature out of direct sunlight and not exposed to direct heat. If any other condition exists consult inspection guide in operational instructions or contact your nearest Beaver Branch.

NOTES

Be Safe.. Think

B-Safe

ROOFERS KIT USER MANUAL

DISTRIBUTED BY:

bsafe.com.au | **Ph:** 1300 783 606 | 02 8882 5700

Be Safe.. Think B-Safe

735-042022